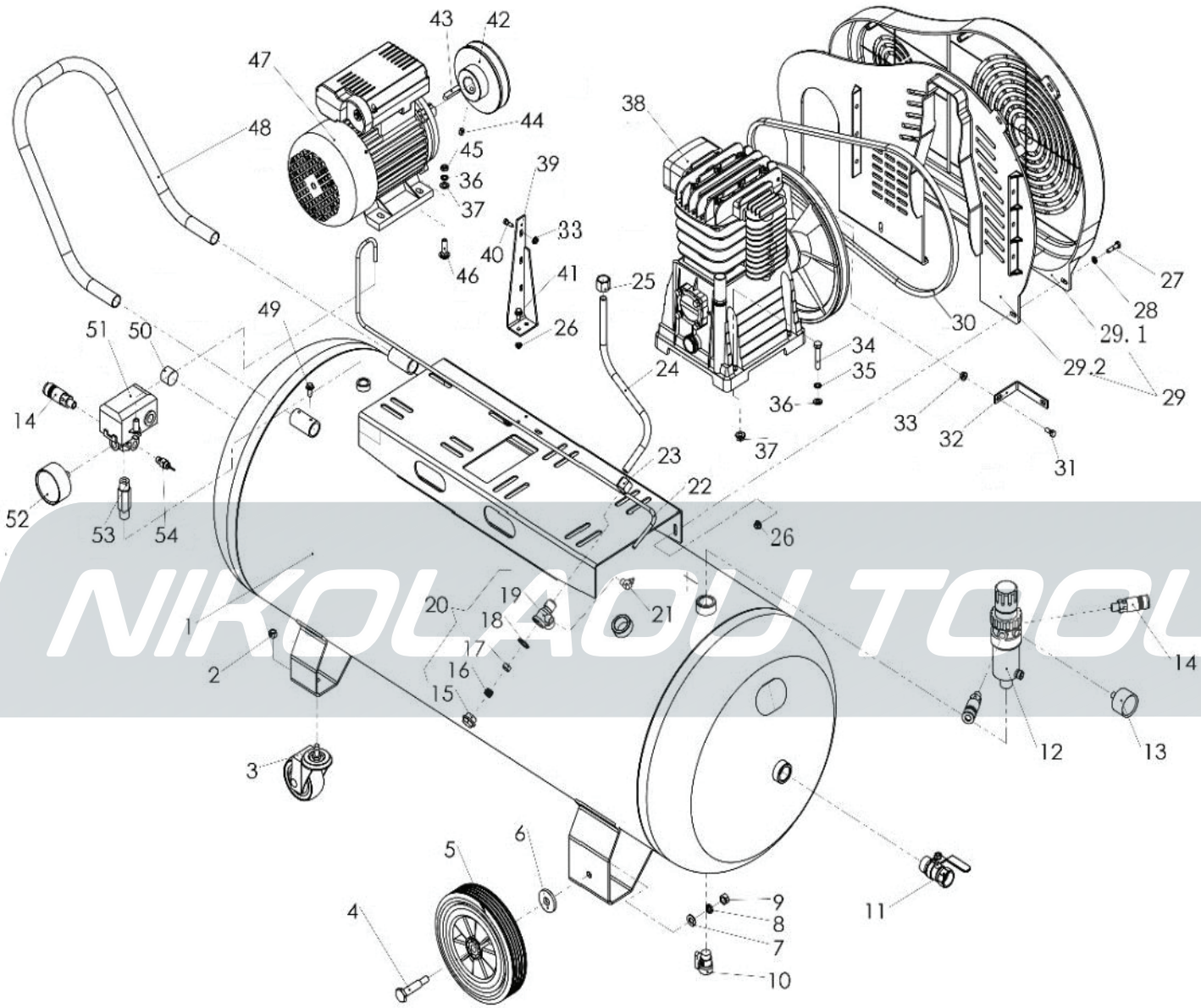

NIKOLAOU TOOLS

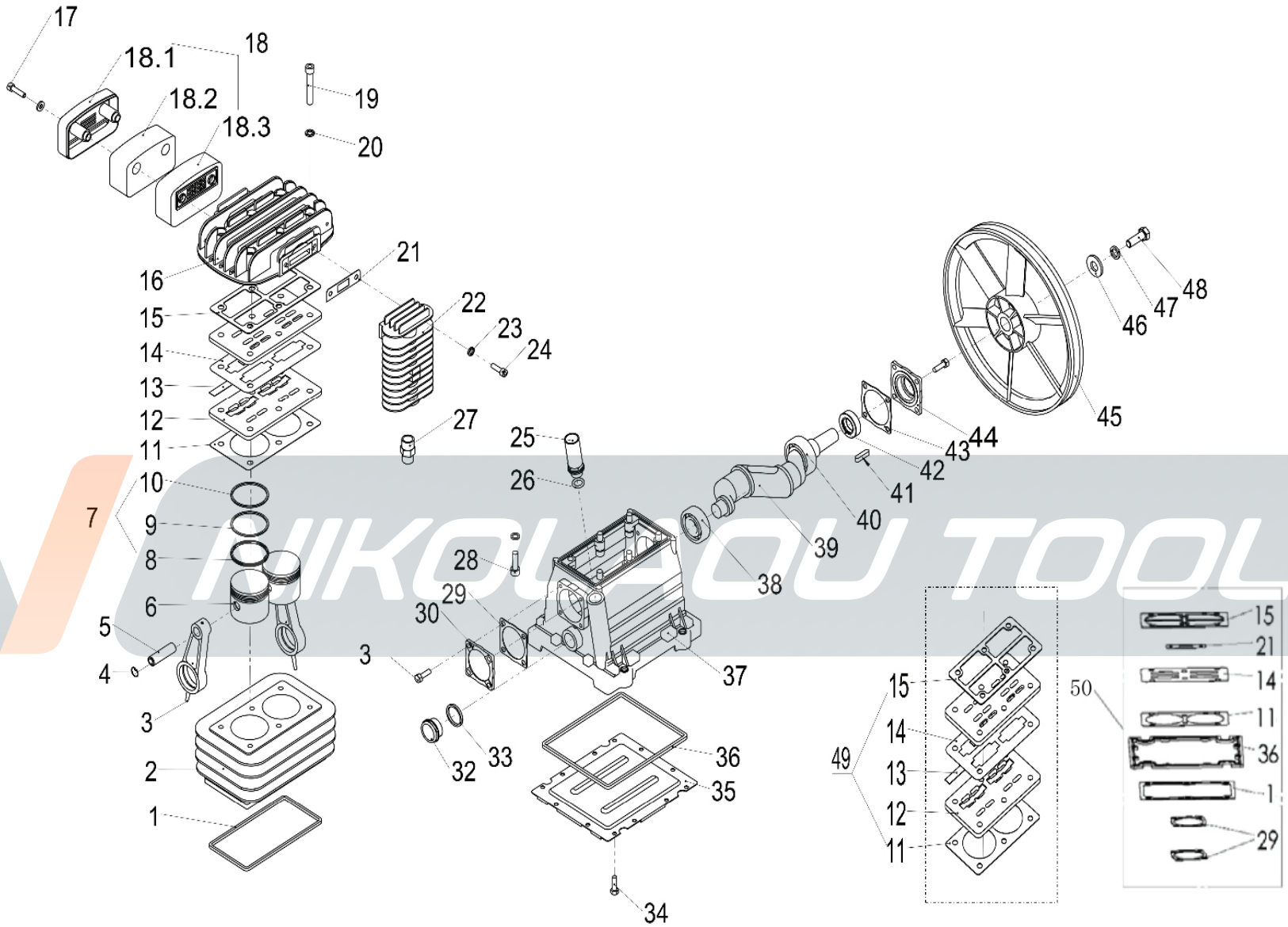

NIKOLAOU TOOLS